# COUNTERBALANCE VALVES

## FOR MOBILE & INDUSTRIAL HYDRAULICS

- Load-Holding
- Overrunning Control
- Maximum Pressure Limited
- Anti-Cavitation
- Deceleration Control
- Thermal Relief Protection

Winner hydraulics

## WINNER HYDRAULICS COUNTERBALANCE VALVES

**CB, CA, CW, MB and MW series**
**FOR LOAD-HOLDING VALVES**

**CO, CK, CC series**
**FOR STATIC LOAD LOCKING**

## BRAND MISSION

# CONTROL.
# SAFETY.
# RELIABILITY.

Winner delivers industry-leading hydraulic solutions engineered to eliminate uncontrolled movement and actuator drift under load. Every valve we design is built on a singular commitment: ensuring your equipment operates with maximum safety and unwavering operational reliability — in the most demanding environments on earth.

From heavy construction to precision industrial automation, Winner counterbalance valves act as the critical safeguard between motion and disaster — holding loads with confidence, releasing them with precision.

### LOAD SAFETY

Prevents uncontrolled descent or movement of suspended loads under any failure condition.

### PRESSURE CONTROL

Maintains precise back-pressure ratios, eliminating drift caused by thermal expansion or leakage.

### OPERATIONAL UPTIME

Hardened construction and engineered tolerances deliver consistent performance across millions of cycles.

> "When gravity and pressure conspire against you, Winner holds the line — every time"

## WHY CHOOSE WINNER HYDRAULICS

**01**
**SUPERIOR QUALITY**
Precise pressure and flow control ensure process stability, maximizing resource efficiency and output.

**02**
**RELIABLE LEAD TIMES**
Efficient production and inventory management ensure stable, competitive delivery schedules.

**03**
**EXPERT SUPPORT**
From selection to maintenance, our experts provide rapid response, customized solutions.

**04**
**LONG-TERM VALUE**
Superior price-to-performance ratio and long-term return on investment.

## WHAT IS A COUNTERBALANCE VALVE?

Also known as a Load Holding Valve or Over-center Valve. Counterbalance valves prevent uncontrolled actuator movement caused by overrunning loads. They maintain load stability, provide controlled lowering, and protect hydraulic systems from hose failure or sudden pressure loss.

## CORE FUNCTIONS

- **MOTION CONTROL & ANTI-CAVITATION**
  Modulates return flow to prevent load runaway and protects actuators from cavitation.
- **PILOT CUSHIONING DESIGN**
  Optimized pilot path for smooth opening and rapid, decisive closure.
- **LOAD HOLDING**
  Provides pressure-compensated locking for static safety and stability.
- **THERMAL & SHOCK PROTECTION**
  Integrated relief function protects against pressure surges and thermal expansion.
- **FAIL-SAFE FUNCTIONALITY**
  Secures actuator position during hose bursts, power loss, or accidental operation.

## APPLICATION FIELDS

AERIAL LIFTS | EXCAVATORS | BOOM TRUCKS | MATERIAL HANDLING | WINCHES | OFFSHORE PLATFORM
EMERGENCY VEHICLES | CRANES | INDUSTRIAL PRESSES | FORKLIFTS | CONCRETE BREAKER CLAMP

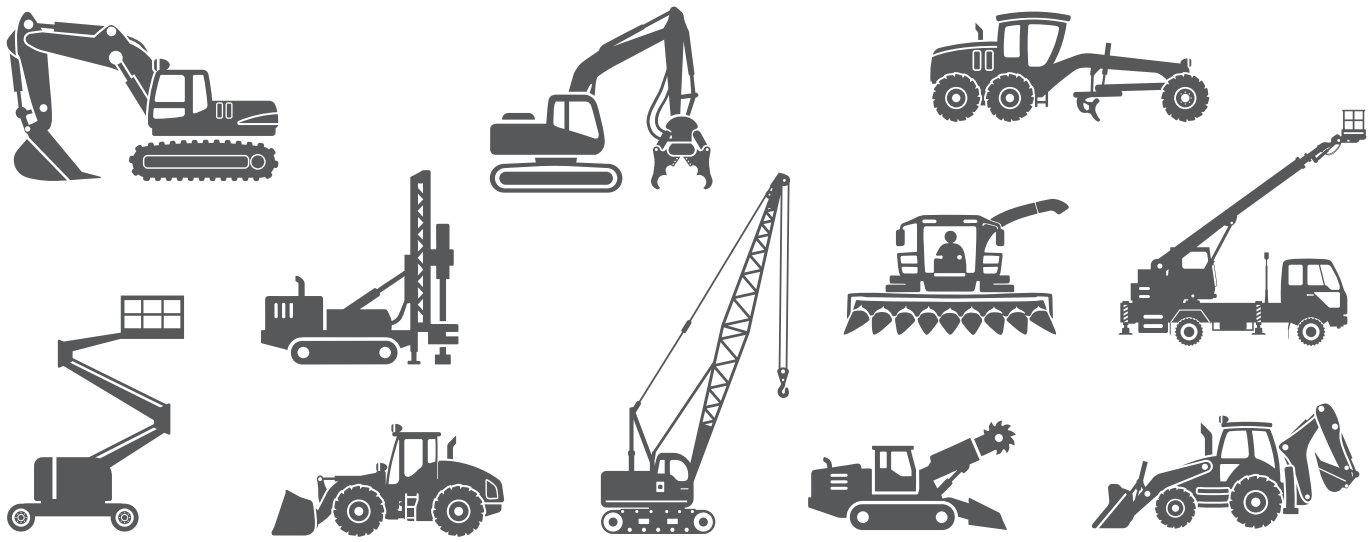

## CB SERIES OVERVIEW

The CB Series is a 3-port counterbalance valve designed for general load-holding and motion control applications. It provides reliable load retention and smooth load lowering in hydraulic systems where moderate backpressure conditions are present.

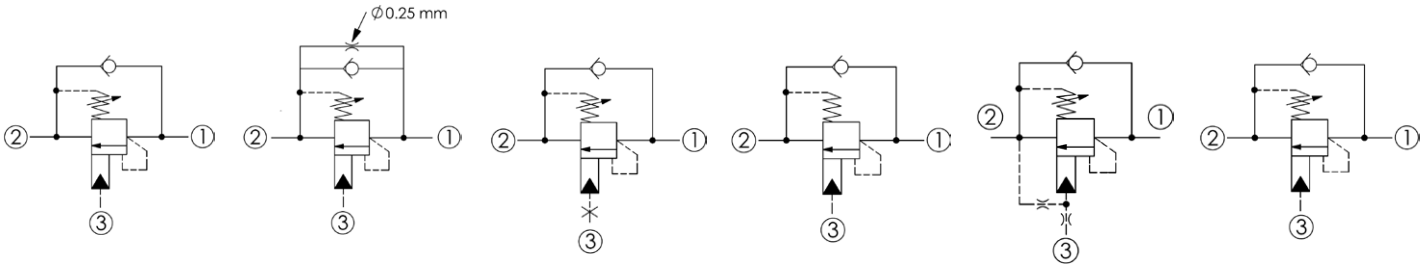


From left to right:
Standard/ Restrictive/ Semi-restrictive/ Ultra-restrictive Counterbalance Valve → Standard Counterbalance Valve with a Ø0.25 mm Orifice
→ Counterbalance Valve without Pilot Assist → Fixed Setting Counterbalance Valve
→ Counterbalance Valve with Bleed through Pilot → Pilot Assisted Relief with Check Counterbalance Valve

## FUNCTIONS

- Allows free flow from Port 1 to Port 2 during lifting through an integral high-capacity check valve
- Blocks reverse flow until pilot pressure is applied to maintain load position
- Modulates return flow to prevent load overrun and ensure controlled lowering

## DESIGN CHARACTERISTICS

- 3-port configuration
- Poppet-type load holding design
- Stable load control performance
- Compact cartridge construction
- Pressure at Port 2 adds directly to the spring setting (1:1 ratio)

## TECHNICAL DATA

| PARAMETER | VALUE |
|---|---|
| Maximum Operating Pressure | 420 bar (6,000 psi) |
| Nominal Flow | Up to 480 LPM |
| Pilot Ratios | 1:1 to 16:1 |
| Internal Leakage | ≤ 5 drops/min (0.3 cc/min) |
| Installation | Cartridge, industry-standard cavity |

## RESTRICTION LEVELS

Counterbalance valves are available in various "restriction" levels to tune system stability and energy efficiency. These models prevent hunting (vibration) during descent, especially in cylinders with rod-down orientations or large area ratios.

| TYPE | STABILITY | FLOW CAPACITY | BEST FOR |
|---|---|---|---|
| Semi-Restrictive | Balanced | Moderate-High | General hydraulic circuits |
| Restrictive | High | Low-Moderate | Precision control |
| Ultra-Restrictive | Highest | Lowest | Small actuators / Critical stability |

## QUICK SELECTION GUIDE ( PORT 1 → PORT 2 )

**01** CB11A3CHL
Standard : 30 – 60 LPM

**02** CB11A3CHL40
Semi-Restrictive: 15 – 40 LPM

**03** CB11A3CHL20
Restrictive: 5 – 20 LPM

**04** CB11A3CHL10
Ultra-Restrictive: < 10 LPM

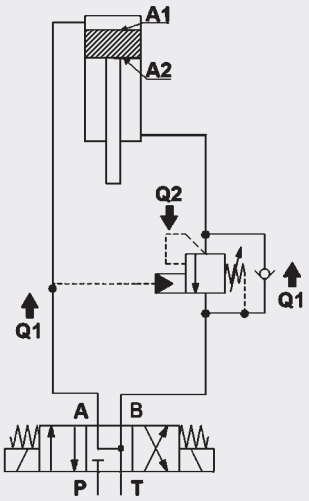


## APPLICATION EXAMPLES — AREA RATIO IMPACT

As cylinder area ratio ($A_1/A_2$) increases, return flow drops — requiring a more restrictive valve.

### SCENARIO A: $Q_1$ = 60 LPM

| $A_1/A_2$ | $Q_2$ (RETURN) | Model |
|---|---|---|
| 1.3 | 46 LPM | CB11A3CHL |
| 2 | 30 LPM | CB11A3CHL40 |
| 3 | 20 LPM | CB11A3CHL20<br>CB11A3CHL40 |

### SCENARIO B: $Q_1$ = 30 LPM

| $A_1/A_2$ | $Q_2$ (RETURN) | Model |
|---|---|---|
| 1.3 | 23 LPM | CB11A3CHL40 |
| 2 | 15 LPM | CB11A3CHL20 |
| 3 | 10 LPM | CB11A3CHL10<br>CB11A3CHL20 |

### SCENARIO C: $Q_1$ = 15 LPM

| $A_1/A_2$ | $Q_2$ (RETURN) | Model |
|---|---|---|
| 1.3 | 1.5 LPM | CB11A3CHL20 |
| 2 | 7.5 LPM | CB11A3CHL20<br>CB11A3CHL10 |
| 3 | 5 LPM | CB11A3CHL10<br>CB11A3CHL20 |

## CB SERIES ENCODING PRINCIPLE

### MODEL NUMBER STRUCTURE

| CB | – | 17A | – | 33 | – | H | – | L | – | 10 / 20 / 32 / 40 / 60 / 80 / 160 |
|---|---|---|---|---|---|---|---|---|---|---|
| TYPE | | CAVITY | | PILOT RATIO | | ADJ. RANGE | | OPTIONS | | Rated flow from Port 1 to Port 2 (semi-restrictive, restrictive, ultra-restrictive type) |

### VALVE TYPES

| | |
|---|---|
| CB | Standard Type, Max. Setting 280 / 350 / 420 bar |
| CB | Semi-Restrictive Type, Max. Setting 280 / 350 / 420 bar |
| CB | Restrictive Type, Max. Setting 280 / 350 bar |
| CB | Ultra-Restrictive Type, Max. Setting 280 / 350 bar |
| CB | Fixed Setting Type, Max. Setting 280 bar / 350 bar |
| CB | Fixed Setting, Semi-Restrictive Type, Max. Setting 350 bar |
| CB | Pilot Assisted Relief with Check Type |
| CB | Counterbalance Valve without Pilot Assist |
| CBA | Fixed Setting Type, Max. Setting 280 / 350 bar |

### CAVITY SIZE

| | | | | | |
|---|---|---|---|---|---|
| 2A | 1"-14UNS | 10WB | 7/8"-14UNF | 20MS | M20 x 1.5 |
| 11A | M20 x 1.5 | 10WC | 7/8"-14UNF | 27M | M27 x 1.5 |
| 17A | M36 x 2 | 16WC | 1-5/16"-12UN | 12B | 1-1/16"-12UN |
| 19A | M48 x 2 | 16WS | 1-5/16"-12UN | | |
| 163A | M16 x 1.5 | 20WS | 1-5/8"-12UN | | |

### PILOT RATIOS

| | | | | | |
|---|---|---|---|---|---|
| 30 | 10:1 | 32 | 2:1 | 33 | 3:1 |
| 34 | 4.5:1 | 35 | 5:1 | 38 | 8:1 |
| 3A | 1.5:1 (sealed pilot) | 3B | 2.3:1 (sealed pilot) | 3C | 3:1 (sealed pilot) |
| 3D | 4:1 / 4.5:1 (sealed pilot) | 3E | 5:1 (sealed pilot) | 3G | 7:1 (sealed pilot) |
| 3H | 8:1 (sealed pilot) | 3J | 10:1 (sealed pilot) | 3P | 16:1 (sealed pilot) |
| 3Q | 2:1 (bleed through pilot) | | | | |

# 3-PORT, PILOT-ASSISTED, LOAD-HOLDING TYPE

## CB SERIES ENCODING PRINCIPLE

### MODEL NUMBER STRUCTURE

| CB | – | 17A | – | 33 | – | H | – | L | – | 10 / 20 / 32 / 40 / 60 / 80 / 160 |
|---|---|---|---|---|---|---|---|---|---|---|
| TYPE | | CAVITY | | PILOT RATIO | | ADJ. RANGE | | OPTIONS | | Rated flow from Port 1 to Port 2 (semi-restrictive, restrictive, ultra-restrictive type) |

## ADJUSTMENT RANGES

| CRACKING PRESSURE 1.7 bar | | | |
|---|---|---|---|
| H | 70 - 280 bar (std. setting 210 bar) | J | 140 - 350 / 200 - 350 bar (std. setting 210 bar) |
| I | 25 - 105 bar (std. setting 70 bar) | K | 70 - 175 bar (std. setting 140 bar) |
| M | 16 - 55 bar (std. setting 25 bar) | P | 20 - 105 bar (std. setting 70 bar) |
| G | 140 - 420 bar (std. setting 210 bar) | | |
| **CRACKING PRESSURE 0.3 bar** | | | |
| A | 42 - 280 bar (std. setting 210 bar) | D | 21 - 210 bar (std. setting 140 bar) |
| W | 70 - 350 bar (std. setting 210 bar) | | |
| **SPECIAL PURPOSE - CRACKING PRESSURE 0.3 bar** | | | |
| A | 70 - 280 bar (std. setting 210 bar) | C | 140 - 350 bar (std. setting 210 bar) |
| B | 25 - 105 bar (std. setting 70 bar) | D | 70 - 175 bar (std. setting 140 bar) |
| E | 16 - 55 bar (std. setting 25 bar) | R | 20 - 105 bar (std. setting 70 bar) |

| FIXED SETTING | | | | | | | |
|---|---|---|---|---|---|---|---|
| 100 | 100 - 140 bar | 225 | 210 - 240 bar | 250 | 235 - 265 bar | 300 | 285 - 310 bar |
| 170 | 155 - 185 bar | 230 | 215 - 245 bar | 260 | 245 - 280 bar | 310 | 285 - 340 bar |
| 200 | 180 - 220 bar | 240 | 220 - 260 bar | 270 | 245 - 290 bar | 350 | 325 - 390 bar |
| 220 | 200 - 245 bar | | | | | | |

## OPTIONS

| | | | |
|---|---|---|---|
| L | Leakproof hex socket screw | C | Stainless steel tamper resistant |
| LP | Leakproof hex socket screw with stainless steel external metal components | CP | Stainless steel tamper resistant cover with stainless steel external metal components |
| CA | Plastic tamper resistant cover of general type hex nut | | |
| CH | Plastic tamper resistant cover of general type hex nut | T | Three-winged handknob kit |
| N | Non-adjustable, cracking pressure 2.0 bar | Q | Non-adjustable, cracking pressure 0.3 bar |

## CA SERIES OVERVIEW

The CA Series is a 3-port counterbalance valve featuring a balanced design that maintains stable valve performance even when return line pressure varies. It is suitable for applications where downstream pressure fluctuations may influence valve operation.

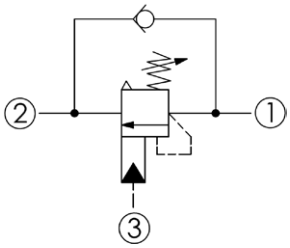


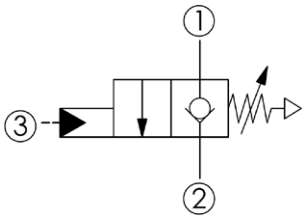


From left to right:
Vented, Atmospherically Referenced Counterbalance Valve
→ Vented, Atmospherically Referenced, Fully Balanced, Load Control Valve without Relief Function

### FUNCTIONS

- Provides free flow during actuator extension via an integral check valve
- Prevents reverse flow until pilot pressure is applied
- Regulates return flow to control load descent and prevent runaway motion

> **IMPORTANT NOTE**
> The vent port must remain clean and unobstructed. Keep the vent port free of debris, paint, or blockages at all times.

### DESIGN CHARACTERISTICS

- 3-port configuration
- Balanced design independent of return line pressure
- Consistent cracking pressure and pilot response
- Suitable for systems with variable backpressure

### TECHNICAL DATA

| PARAMETER | VALUE |
|---|---|
| Maximum Operating Pressure | 420 bar (6,000 psi) |
| Nominal Flow | Up to 480 LPM |
| Pilot Ratios | 1:1, 2:1, 3:1, 4:1, 4.5:1, 5:1, 7:1, 8:1, 10:1 |
| Internal Leakage | ≤ 5 drops/min (0.3 cc/min) |
| Installation | Cartridge, CB-compatible cavity |
| Port Configuration | 3-Port |
| Spring Chamber | Atmospherically Referenced |

# 3-PORT, PILOT-ASSISTED, PRESSURE INDEPENDENT TYPE

## CA SERIES ENCODING PRINCIPLE

**MODEL NUMBER STRUCTURE**

| CA | – | 11A | – | 3A | – | H | – | L |
|---|---|---|---|---|---|---|---|---|
| TYPE | | CAVITY | | PILOT RATIO | | ADJ. RANGE | | OPTIONS |

### VALVE TYPES

| | |
|---|---|
| CA | Vented, Atmospherically Referenced Type, Max. Setting 280 / 350/ 420 bar |
| CA | Vented, Atmospherically Referenced, Fully Balanced Load Control Valve without Pilot Assist, Max. Setting 350 bar |

### CAVITY SIZE

| | | | |
|---|---|---|---|
| 2A | 1"-14UNS | 27M | M27 x 1.5 |
| 11A | M20 x 1.5 | 18MS | M18 x 1.5 |
| 17A | M36 x 2.0 | 10WB | 7/8"-14UNF |
| 19A | M48 x 2.0 | 10WC | 7/8"-14UNF |

### PILOT RATIOS

| | | | | | |
|---|---|---|---|---|---|
| 3A | 1.5:1 (sealed pilot) | 3B | 2.3:1 (sealed pilot) | 3C | 3:1 (sealed pilot) |
| 3D | 4:1 / 4.5:1 (sealed pilot) | 3E | 5:1 (sealed pilot) | 3G | 7:1 (sealed pilot) |
| 3H | 8:1 (sealed pilot) | | | | |
| 3N | With sealed pilot, atmospherically referenced | | | | |

## CA SERIES ENCODING PRINCIPLE

**MODEL NUMBER STRUCTURE**

| CA | – | 11A | – | 3A | – | H | – | L |
|---|---|---|---|---|---|---|---|---|
| TYPE | | CAVITY | | PILOT RATIO | | ADJ. RANGE | | OPTIONS |

### ADJUSTMENT RANGES

| | | | |
|---|---|---|---|
| CRACKING PRESSURE 1.5 bar | | | |
| H | 70 - 280 bar (std. setting 210 bar) | F | 70 - 175 bar (std. setting 140 bar) |
| I | 25 - 105 bar (std.setting 70 bar) | G | 140 - 420 bar (std. setting 280 bar) |
| CRACKING PRESSURE 2.0 bar | | | |
| H | 105 - 280 bar (std. setting 210 bar) | I | 20 - 160 bar (std. setting 70 bar) |
| CRACKING PRESSURE 2.8 bar | | | |
| H | 70 - 280 bar (std. setting 210 bar) | I | 25 - 105 bar (std. setting 70 bar) |
| CRACKING PRESSURE 1.7 bar | | | |
| H | 70 - 280 bar (std. setting 210 bar) | M | 8 - 28 bar (std. setting 25 bar) |
| I | 25 - 105 bar (std.setting 70 bar) | N | 16 - 55 bar (std. setting 25 bar) |
| SPECIAL PURPOSE - CRACKING PRESSURE 0.3 bar | | | |
| A | 70 - 280 bar (std. setting 210 bar) | E | 16 - 55 bar (std. setting 25 bar) |
| B | 25 - 105 bar (std. setting 70 bar) | Q | 8 - 28 bar (std. setting 14 bar) |
| C | 140 - 350 bar (std. setting 210 bar) | | |
| PILOT ADJUSTMENT RANGES | | | |
| 1050 | 20 - 105 bar (std. setting 70 bar) | 2100 | 35 - 210 bar (std. setting 70 bar) |

### Options

| | | | |
|---|---|---|---|
| L | Leakproof hex socket screw | C | Stainless steel tamper resistant |
| LP | Leakproof hex socket screw with stainless steel external metal components | CA | Plastic tamper resistant cover of general type hex nut |
| K | Handknob with lock knob | CB | Plastic tamper resistant cover |
| T | Three-winged handknob kit | CH | Plastic tamper resistant cover of general type hex nut |

# 4-PORT, PILOT-ASSISTED, EXTERNAL DRAIN TYPE

## CW SERIES OVERVIEW

The CW Series is a 4-port counterbalance valve designed for applications with high or unstable return line pressure. The external drain configuration isolates internal valve operation from backpressure, ensuring consistent load control.

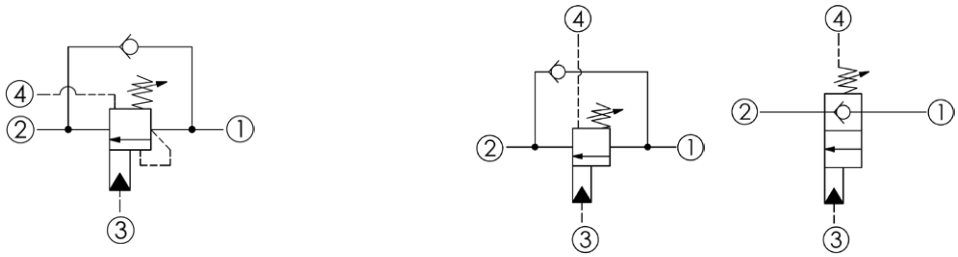


From left to right:
Vented Counterbalance Valve → Vented, Fully Balanced Load Control Valve without Relief Function

## FUNCTIONS

- Allows free flow during load lifting through an integral check valve
- Blocks reverse flow until pilot pressure is applied
- Modulates return flow to maintain stable load lowering

## DESIGN CHARACTERISTICS

- 4-port configuration with external drain
- Independent of return line backpressure
- Improved stability in high-backpressure systems
- Reliable load-holding performance

## TECHNICAL DATA

| PARAMETER | VALUE |
|---|---|
| Maximum Operating Pressure | 420 bar (6,000 psi) |
| Nominal Flow | Up to 480 LPM |
| Pilot Ratios | 1:1 to 10:1 |
| Internal Leakage | ≤ 5 drops/min (0.3 cc/min) |
| Installation | Cartridge, CB-compatible cavity |
| Drain Requirement | Independent line to tank |

## SERIES QUICK COMPARISON

| FEATURE | CB | CA | CW |
|---|---|---|---|
| Ports | 3 | 3 | 4 |
| Reference | Internal (Port 2) | Atmospheric vent | External Drain |
| Backpressure | Sensitive | Independent | Independent |
| Typical Use | Standard | General Mobile | Heavy-Duty |

# 4-PORT, PILOT-ASSISTED, EXTERNAL DRAIN TYPE

## CW SERIES ENCODING PRINCIPLE

**MODEL NUMBER STRUCTURE**

| CW | – | 21A | – | 4A | – | H | – | L |
|---|---|---|---|---|---|---|---|---|
| TYPE | | CAVITY | | PILOT RATIO | | ADJ. RANGE | | OPTIONS |

### VALVE TYPES

| | |
|---|---|
| CW | 4-Port Vented Type, Max. Setting 280 / 420 bar |
| CW | 4-Port Vented Type without Relief Function<br>Fully Balanced, Load Control Valve, Max. Setting 350 / 420 bar |
| CWA | 4-Port Vented Type, Max. Setting 350 bar |

### CAVITY SIZE

| | | | |
|---|---|---|---|
| 21A | M20 x 1.5 | 23A | M36 x 2.0 |
| 22A | 1"-14UNS | 24A | M48 x 2.0 |

### PILOT RATIOS

| | | | | | |
|---|---|---|---|---|---|
| 4A | 1:1 (sealed pilot) | 4B | 2:1 (sealed pilot) | 4C | 3:1 (sealed pilot) |
| 4D | 4:1 (sealed pilot) | 4E | 5:1 (sealed pilot) | 4J | 10:1 (sealed pilot) |
| 4N | With sealed pilot, balanced | | | | |

### ADJUSTMENT RANGES

| CRACKING PRESSURE 1.5 / 2.8 bar | | CRACKING PRESSURE 1.7 bar | |
|---|---|---|---|
| H | 70 - 280 bar (std. setting 210 bar) | H | 70 - 280 bar (std. setting 210 bar) |
| I | 25 - 105 bar (std.setting 70 bar) | I | 25 - 105 bar (std.setting 70 bar) |
| F | 70 - 175 bar (std. setting 140 bar) | F | 70 - 175 bar (std. setting 140 bar) |
| G | 140 - 420 bar (std. setting 280 bar) | G | 140 - 420 bar (std. setting 280 bar) |
| | | W | 140 - 350 bar (std. setting 210 bar) |

### Options

| | | | | | |
|---|---|---|---|---|---|
| L | Leakproof hex socket screw | C | Stainless steel tamper resistant | | |
| LP | Leakproof hex socket screw with stainless steel external metal components | CB | Plastic tamper resistant cover | CH | Plastic tamper resistant cover of general type hex nut |

## MB SERIES OVERVIEW

The MB Series integrates proportional control capability with counterbalance valve functionality. It provides precise load control and smooth motion modulation for applications requiring adjustable pressure settings.

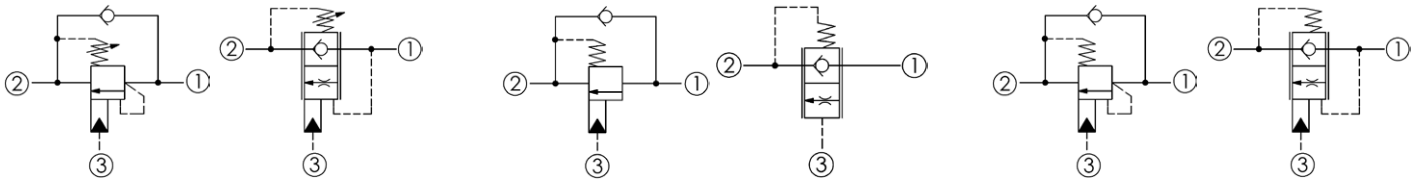


From left to right:
Load Reactive, Load Control Valve → Fixed Setting, Load Reactive, Load Control Valve → 3-Port Fully Balanced Load Control Valve without Relief Function

### FUNCTIONS

- Enables proportional pressure control for precise load handling
- Maintains load position until pilot pressure or control signal is applied
- Modulates return flow to prevent load overrun and ensure smooth motion

> " The higher the load, the greater the stability. "

### DESIGN CHARACTERISTICS

- 3-port proportional counterbalance design
- Adjustable and precise pressure modulation
- Stable control response
- Suitable for precision motion systems

### TECHNICAL DATA

| PARAMETER | VALUE |
|---|---|
| Maximum Operating Pressure | 420 bar (6,000 psi) |
| Nominal Flow | Up to 480 LPM |
| Pilot Ratios | 1.5:1, 3:1, 4.5:1 |
| Internal Leakage | ≤ 5 drops/min (0.3 cc/min) |
| Port Configuration | 3-Port |

# 3-Port Fully Balanced Counterbalance Valve

## MB SERIES ENCODING PRINCIPLE

### MODEL NUMBER STRUCTURE

| MB | – | 11A | – | 3A | – | H | – | L |
|---|---|---|---|---|---|---|---|---|
| TYPE | | CAVITY | | PILOT RATIO | | ADJ. RANGE | | OPTIONS |

### VALVE TYPES

| | |
|---|---|
| MB | Non-Vented Load Reactive, Load Control Valve<br>Max. Setting 350 / 420 bar |
| MB | Non-Vented, Fixed Setting, Load Reactive, Load Control Valve<br>Max. Setting 350 bar |
| MB | 3-Port Fully Balanced Load Control Valve without Relief Function<br>Max. Setting 350 bar |

### CAVITY SIZE

| | | | |
|---|---|---|---|
| 11A | M20 x 1.5 | 17A | M36 x 2.0 |
| 2A | 1"-14UNS | 19A | M48 x 2.0 |

### PILOT RATIOS

| | | | | | |
|---|---|---|---|---|---|
| 3A | 1:1 (sealed pilot) | 3C | 3:1 (sealed pilot) | 3D | 4.5:1 (sealed pilot) |
| 3N | With sealed pilot, balanced | | | | |

### ADJUSTMENT RANGES

| CRACKING PRESSURE 1.5 bar | | MINIMUM PILOT SPRING PRESSURE | | | |
|---|---|---|---|---|---|
| H | 70 - 280 bar (std. setting 210 bar) | 0050 | 5 bar | 0200 | 20 bar |
| I | 25 - 105 bar (std.setting 70 bar) | 0150 | 10.5 bar | 0330 | 33 bar |
| J | 140 - 350 bar (std. setting 210 bar) | 0140 | 14 bar | 0367 | 36.7 bar |
| F | 70 - 175 bar (std. setting 140 bar) | FIXED SETTING - CRACKING PRESSURE 1.7 bar | | | |
| G | 140 - 420 bar (std. setting 280 bar) | 310 | 290 - 330 bar | | |

### Options

| | | | | | |
|---|---|---|---|---|---|
| L | Leakproof hex socket screw | C | Stainless steel tamper resistant | N | Non-adjustable |
| LP | Leakproof hex socket screw with stainless steel external metal components | | | | |

## MW SERIES OVERVIEW

The MW Series combines proportional modulation with external drain isolation, making it ideal for high-performance hydraulic systems requiring both precise control and independence from return line backpressure.

From left to right:
Vented Load Reactive, Load Control Valve → Vented, Fully Balanced Load Control Valve without Relief Function

## FUNCTIONS

- Allows free flow from Port 1 to Port 2 during lifting through an integral high-capacity check valve
- Blocks reverse flow until pilot pressure is applied to maintain actuator position
- Modulates return flow to prevent load overrun and ensure smooth lowering

> " The higher the load, the greater the stability. "

## DESIGN CHARACTERISTICS

- 4-port configuration with external drain
- Fully balanced proportional design
- External drain isolation from return line pressure
- Stable modulation under dynamic load conditions

## TECHNICAL DATA

| PARAMETER | VALUE |
|---|---|
| Maximum Operating Pressure | 420 bar (6,000 psi) |
| Nominal Flow | Up to 480 LPM |
| Pilot Ratios | 1.5:1, 3:1, 4.5:1 |
| Internal Leakage | ≤ 5 drops/min (0.3 cc/min) |
| Drain Requirement | Independent line to tank |

# 4-Port Fully Balanced Counterbalance Valve

## MW SERIES ENCODING PRINCIPLE

### MODEL NUMBER STRUCTURE

| MW | – | 22A | – | 4A | – | H | – | L |
|---|---|---|---|---|---|---|---|---|
| TYPE | | CAVITY | | PILOT RATIO | | ADJ. RANGE | | OPTIONS |

### VALVE TYPES

| | |
|---|---|
| MW | 4-Port Vented Load Reactive, Load Control Valve<br>Max. Setting 350 bar |
| MW | 4-Port, Vented, Fully Balanced Load Control Valve without Relief Function<br>Max. Setting 350 bar |

### CAVITY SIZE

| | |
|---|---|
| 22A | 1"-14UNS |
| 23A | M36 x 2 |
| 24A | M48 x 2 |

### PILOT RATIOS

| | | | | | |
|---|---|---|---|---|---|
| 4A | 1.5:1 (sealed pilot) | 4C | 3:1 (sealed pilot) | 4D | 4.5:1 (sealed pilot) |
| 4N | With sealed pilot, balanced | | | | |

### ADJUSTMENT RANGES

| CRACKING PRESSURE 1.7 bar | | MINIMUM PILOT SPRING PRESSURE | | | |
|---|---|---|---|---|---|
| H | 70 - 280 bar (std. setting 210 bar) | 0050 | 5 bar (pilot range 10 - 30 bar) | 0200 | 20 bar |
| J | 140 - 350 bar (std. setting 210 bar) | 0070 | 7 bar (pilot range 11 - 25 bar) | 0330 | 33 bar |
| F | 140 - 420 bar max. setting (std. setting 140 bar) | 0105 | 10.5 bar | 0367 | 36.7 bar |

### Options

| | |
|---|---|
| L | Leakproof hex socket screw |
| N | Non-adjustable |

## WINNER PRODUCT SELECTION GUIDE

Winner provides a comprehensive range of counterbalance valves designed to meet diverse hydraulic system requirements, from standard industrial applications to high-precision proportional control systems.

| SERIES | PORTS | PROPORTIONAL | BACKPRESSURE INDEP. | TYPICAL USE |
|---|---|---|---|---|
| CB | 3 | No | No | General Industrial |
| CA | 3 | No | Yes | Variable Return Pressure |
| CW | 4 | No | Yes | High Backpressure |
| MB | 3 | Yes | No | Precision Proportional |
| MW | 4 | Yes | Yes | High-precision, High-dynamic |

### SELECTION TIP

- For systems where return-line pressure may fluctuate, CA or CW Series provide more stable performance.
- For applications requiring precise electronic control, choose MB or MW Series proportional valves.

### INSTALLATION GUIDELINES

- Install valve as close as possible to actuator
- Keep pilot lines short and properly sized
- For 4-port models, connect drain directly to tank with minimal backpressure
- Maintain fluid cleanliness ISO 4406 18/16/13 or better
- Set cracking pressure to approximately 1.3 × maximum load-induced pressure

**CRITICAL SAFETY WARNING**
Never service a counterbalance valve while a load is suspended.

## PILOT PRESSURE REQUIREMENTS

Load lowering is initially restricted by the relief section of the counterbalance valve. The load-induced pressure generates a force that assists in opening the valve, working against spring force. As a result, the load itself reduces the actual pilot pressure required to open the relief piston.

### KEY PARAMETERS

P = Pressure Required to Open Valve

L = Load-induced Pressure

$P_S$ = Pressure Setting

$C_R$ = Cylinder Area Ratio = Bore Area ÷ Annular Area

$P_R$ = Pilot Ratio = Area of Pilot Piston ÷ Differential Area of Control Piston

### PRESSURE FORMULAS BY INSTALLATION TYPE

#### LOAD RETRACTS CYLINDER ROD (VALVE ON BLIND END)

$$P = (P_S - L) / (P_R - C_R)$$

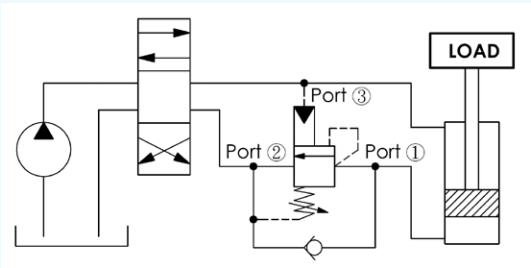


Often simplified as: $P = (P_S - L) / P_R$

#### LOAD EXTENDS CYLINDER ROD (VALVE ON ROD END)

$$P = (P_S - L) / (P_R - C_R)$$

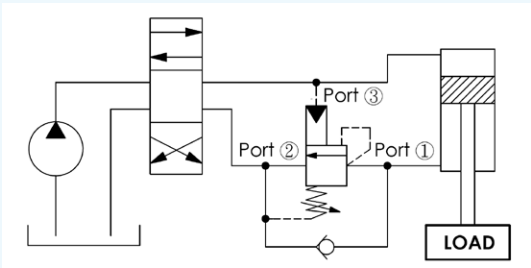


#### EQUAL-AREA ACTUATOR OR HYDRAULIC MOTOR ($C_R$= 1)

$$P = (P_S - L) / (P_R + 1)$$

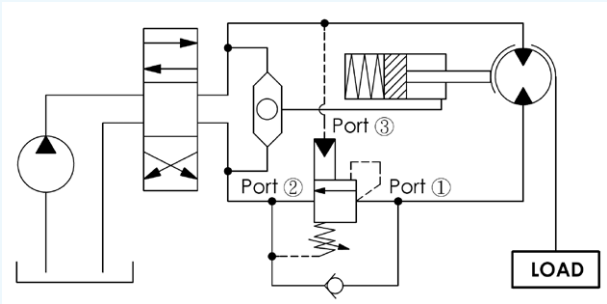


**CALCULATION CONDITIONS**
Formulas apply under ideal conditions: no return line backpressure, and no seal friction.
Real-world conditions may require adjustment.

## WINNER SOLUTUION FOR STATIC LOAD LOCKING

Winner CC, CK, and CO series are cartridge-style pilot-operated check valves designed for static loading in hydraulic circuits. Suitable for static load applications requiring zero-leakage cylinder or motor position holding. They prevent drift in overrunning loads until pilot-released, ideal for safety-critical mobile and industrial hydraulics.

| SERIES | TYPE | KEY CHARACTERISTIC |
|---|---|---|
| CO | Standard pilot<br>Small pilot leakage acceptable | Standard (unsealed) pilot: Allows a small amount of pilot leakage into the work port |
| CK | Small pilot leakage acceptable | Vented design: Dedicated vent port (Port 4) isolates the pilot piston from backpressure, ensuring stable operation |
| CC | Sealed pilot<br>Internal piston seal, no port leakage | Sealed pilot design: Internal seal on the pilot piston prevents leakage between the pilot port and work ports |

### COMPARISON: COUNTERBALANCE VS LOAD-HOLDING

| FEATURE | LOAD-HOLDING | COUNTERBALANCE VALVE |
|---|---|---|
| Primary Function | Static load locking | Dynamic load control |
| Operating Principle | On/Off: Opens fully once pilot pressure exceeds threshold | Modulating: Opens proportionally to match flow demand |
| Motion Control | May cause instability or chatter when lowering heavy loads | Smooth and controlled descent with backpressure |
| Overrunning Load Control | Not suitable | Designed for overrunning loads |
| Hose-Burst Safety | Excellent (Static) | Excellent (Static & Dynamic) |
| Heat Generation | Very Low | Higher (due to induced backpressure) |
| Thermal Relief | None | Yes, CB can vent heat-induced pressure |

## WHEN TO USE

### Use CC, CK, or CO if...

- Need zero-leakage to prevent a cylinder from drifting over many hours.
- Load is "non-overrunning".
- Only need to lock a position (e.g., a lift table that stays at a specific height).

### Use CBV (counterbalance) if...

- Smooth, controlled lowering is required (no bouncing or vibration).
- Load may overrun the hydraulic supply.
- Thermal expansion protection (CB valves can act as relief valves to bleed off pressure caused by heat; standard CO/CC valves cannot).

**Key Hightlights**
Load-holding valves secure the load at rest.
Counterbalance valves ensure safe and controlled motion.

## LOAD-HOLDING VALVE SYMBOLS

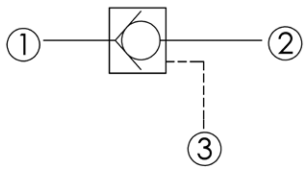


**CC Series**
Pilot-to-close

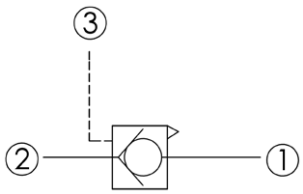


**CK Series**
Vented, Atmospherically Referenced, Pilot-to-open

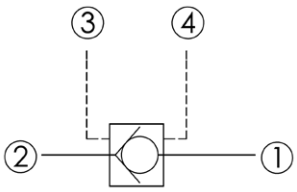


**CK Series**
Vented, Pilot-to-open

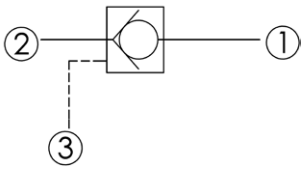


**CO Series**
Pilot-to-close, Ports 2 to 1

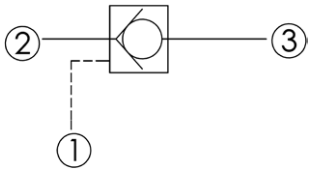


**CO Series**
Pilot-to-close, Ports 3 to 2

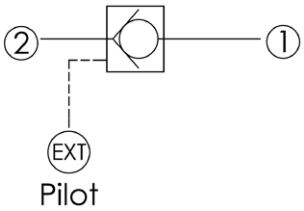


**CO Series**
Pilot-to-open with External Pilot Port

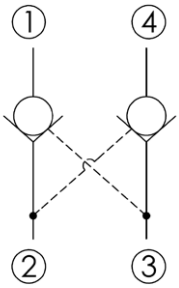


**CO Series**
Dual Pilot-to-open

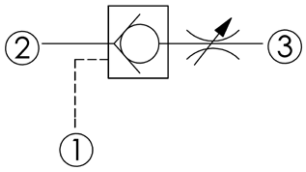


**CO Series**
Pilot-to-open with Adjustment

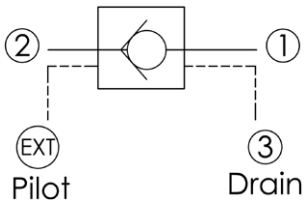


**CO Series**
Pilot-to-open with External Pilot Port, Sealed Pilot, and Stem Seal

## DUAL CUSHION LOCK ASSEMBLY

This setup is standard for cranes and winches. The counterbalance valve controls load movement in three key operating modes, ensuring safety and precision at every stage.

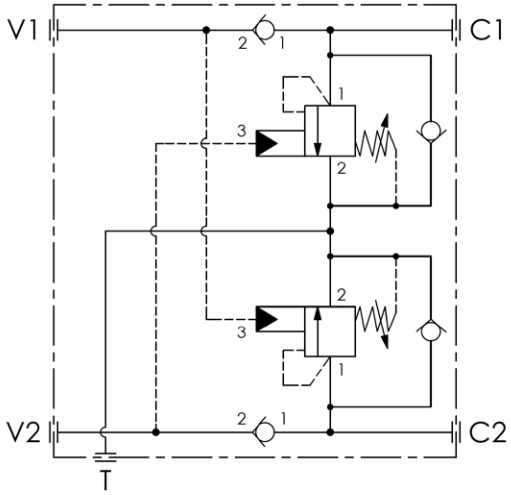


**1** EXTENSION — RAISING THE LOAD

Action: Fluid enters port V1, flows through the check valve, and fills the cylinder.
Result: The cylinder extends smoothly. Return flow from the other side is metered (restricted) to keep movement stable.

**2** RETRACTION — LOWERING THE LOAD

Action: Fluid enters the rod end while simultaneously sending a pilot signal to the counterbalance valve.
Result: This "unlocks" the valve. The load is lowered under control — the valve creates backpressure, preventing runaway speeds caused by gravity.

**3** NEUTRAL — LOCKING THE LOAD

Action: The directional valve is centered (closed).
Result: The counterbalance valves close immediately. This mechanically locks the fluid inside the cylinders, preventing load drift even if a hose bursts or the pump stops.

### PRESSURE FORMULAS BY INSTALLATION TYPE

If a cylinder moves faster than the pump can supply oil (e.g., a heavy load dropping quickly), a vacuum can form. The T port allows the cylinder to draw in low-pressure oil from the tank to fill that void, preventing cavitation and air bubbles.

## ASSEMBLY VARIANTS

The Dual Cushion Lock Assembly is available in four configurations, each building on the basic design with additional protection or signaling capability.

**BASIC DUAL CUSHION LOCK ASSEMBLY**
Two counterbalance valves mounted in parallel for standard load holding and controlled motion in both directions.

**+ SHUTTLE VALVE**
Shuttle valve senses the active line and adds a brake release signal for enhanced control integration.

**+ ANTI-CAVITATION CHECKS**
Anti-cavitation check valves connected to the T port prevent rod-side vacuum formation during rapid lowering.

**+ SHUTTLE + ANTI-CAVITATION CHECKS**
Combined configuration offering both brake release signaling and full cavitation protection — the most comprehensive variant.

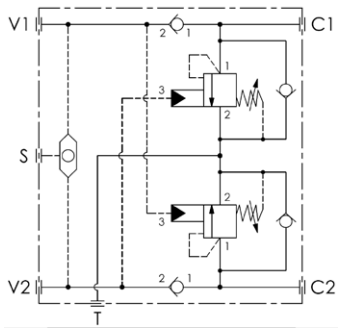

With Shuttle

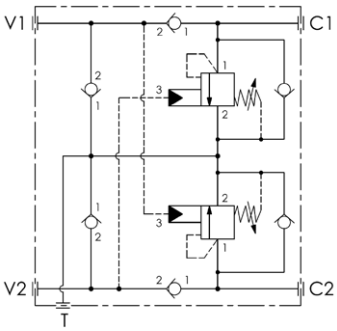

With Anti-Cavitation

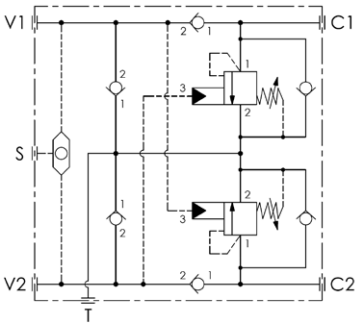

With Shuttle+Anti-Cavitation

### VARIANT COMPARISON

| VARIANT | KEY ADDITIONS | COUNTERBALANCE ROLE | VS. BASIC |
|---|---|---|---|
| With Shuttle | Shuttle valve | Load metering/ holding | Adds brake release signal |
| Shuttle + Anti-Cavitation | Shuttle + checks | Checks prevent rod vacuum | Brake signal + Cavitation protection |
| Anti-Cavitation Only | Anti-Cavitation checks | Optional T port | Cavitation protection only |

# WE CONNECT

Winner Hydraulics offers a complete counterbalance valve platform, covering applications from standard load holding to advanced stability control and high-precision proportional systems. Our comprehensive product range ensures that you have the right solution for every hydraulic control challenge — CA, CB, CW, MB, and MW series.

## COUNTERBALANCE VALVES
## OVERCENTRE VALVES
## LOAD-HOLDING VALVES

CB SERIES | CA SERIES | CW SERIES | MB SERIES | MW SERIES

CO SERIES | CK SERIES | CC SERIES

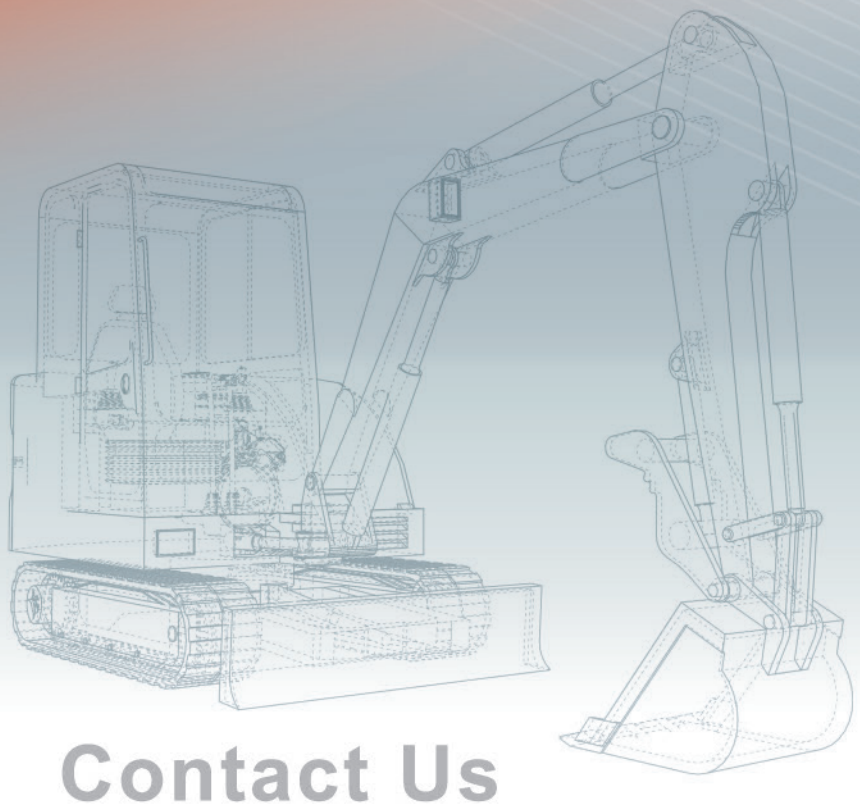

## Contact Us


+886-4-7865118

+886-4-7873915

sales@winnerhyd.com

www.winnerhydraulics.com